EPCO RS100

EPCO RS100 Sliding System For Glass Doors

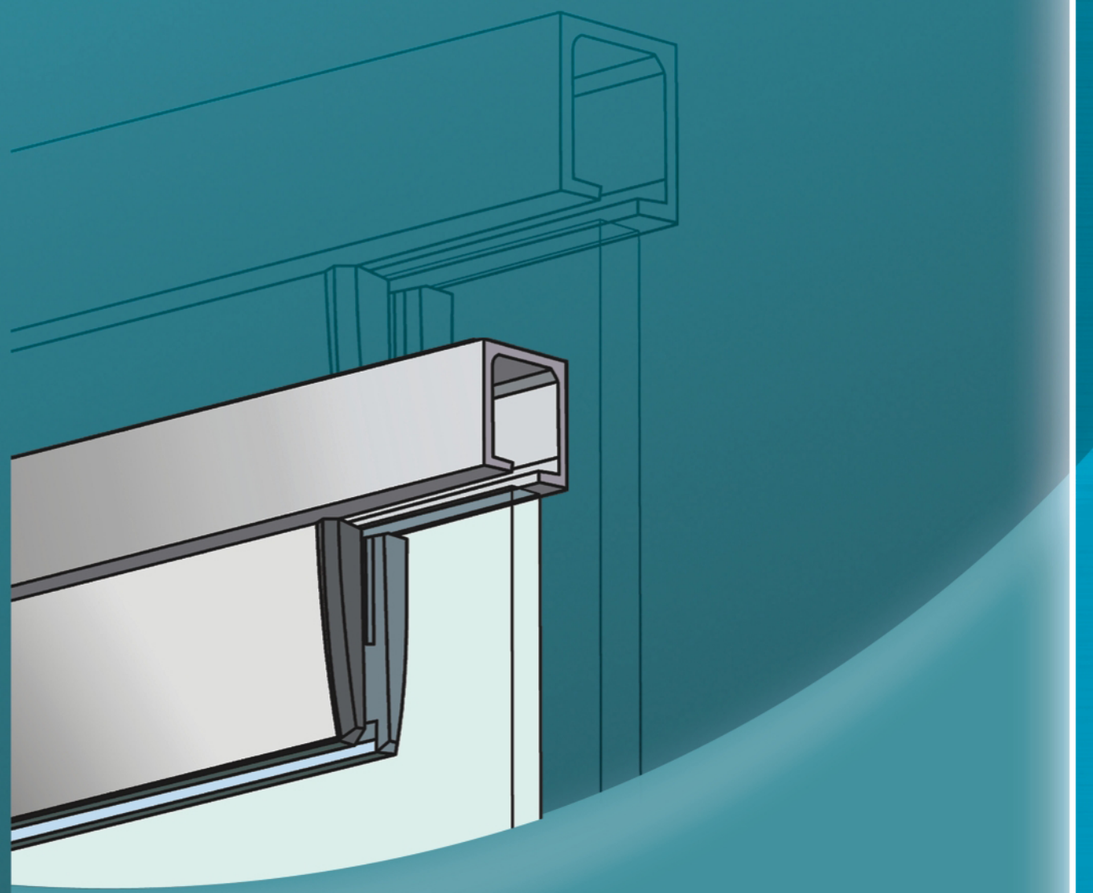

URL:http://www.epcocorp.com
E-mail:epco@epcocorp.com

Head Office
EPCO ARCHITECTURAL HARDWARE (USA) INC.
16004 Kaplan Avenue, City of Industry, CA91744
Tel:(626)961-6827 Fax:(626)961-3525

Taiwan Branch
EPCO ARCHITECTURE HARDWARE (TAIWAN) CORP.
Unit. A,18-30, Jiang Shang Rd, Da Liao Hsiang,
Kaohsiung Hsien, Taiwan
Tel:(886-7)701-3219 Fax:(886-7)701-3210

Philippines Branch
EPCO-Phils
505A Haber building, Boni Avenue, Bregy, Plainview
Madaluyoung City, Philippines
Tel:(632)532-1500 Fax:(632)531-9010

EPCO UK
Glasswall Engineering Ltd.
Glasswall@epco-uk.com
www.epco-uk.com

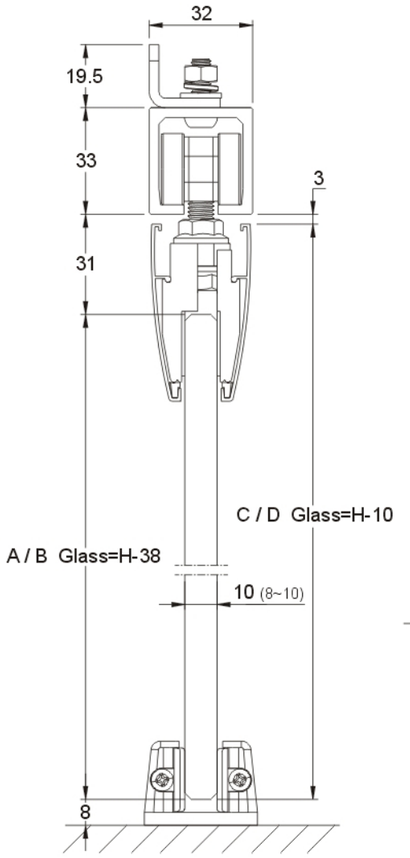

Type-III

Glass Cutting

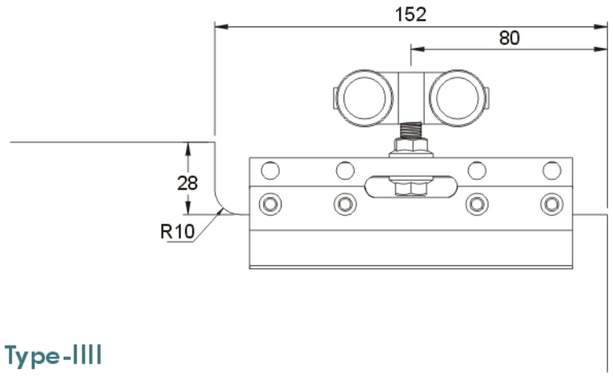

Type-IIII

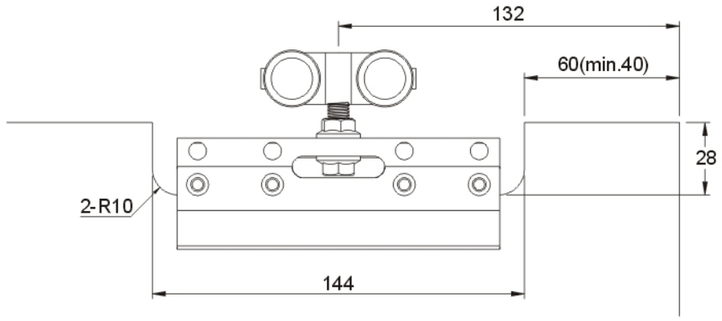

Track Fixing Types

Ceiling Fixing

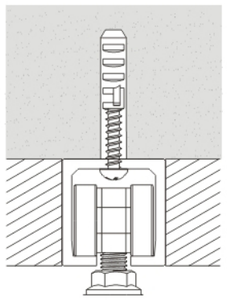

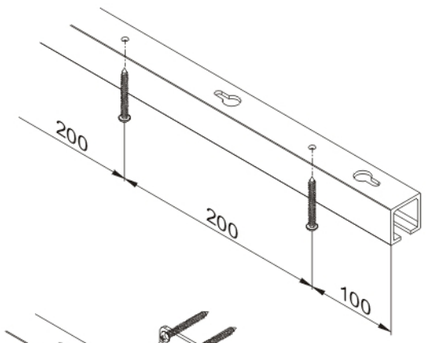

Wall Fixing

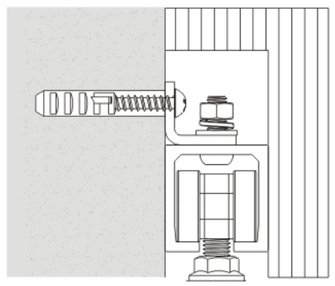

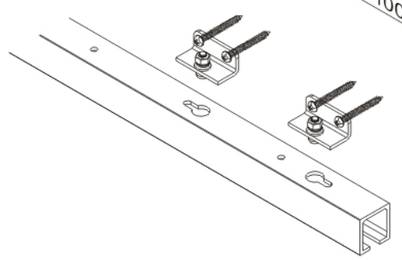

Type-I

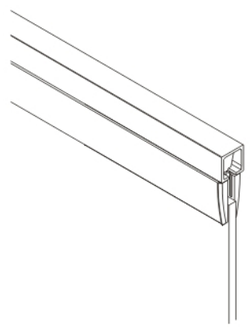

Door Width : max. 1200mm
Door Height : max. 2700mm
Door Weight : max. 80kg
for 8~10mm glass

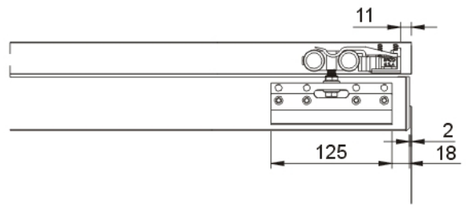

Type-II

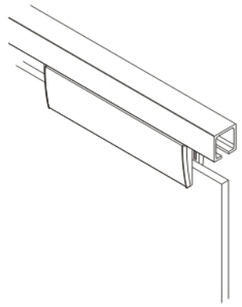

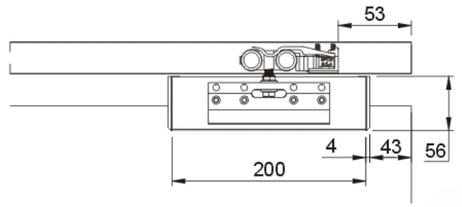

Type-III

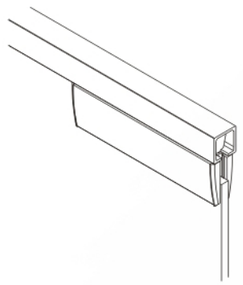

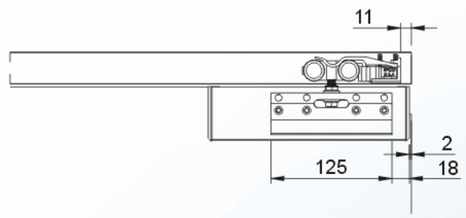

Type-IIII

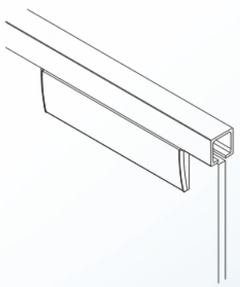

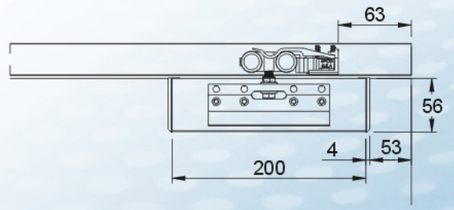

EPCO RS100

RS100 - SET

x2

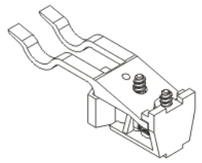
x2

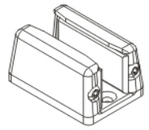
x1

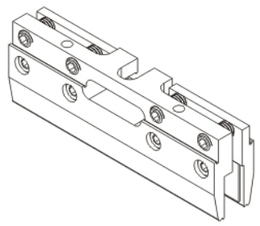
x2

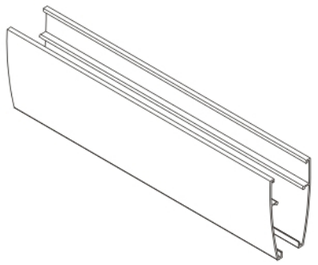
x2 (200mm)

End Cap

TYPE I = x1
TYPE II / III / IIII = x2

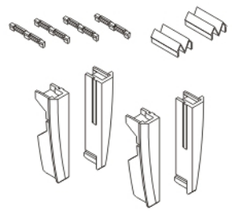

OPTIONAL :

Steel Bracket For Wooden Door

RS100- 076

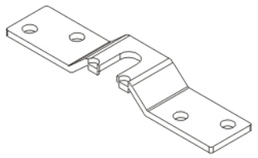

Wall Fixing For Track

RS100- 077

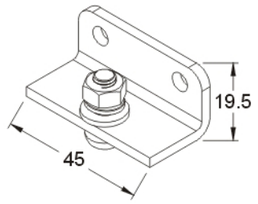

Track Aluminium Pre-drilled

RS100 - TR200
2000mm

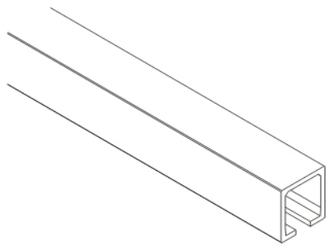

Clip Fascia For Clamping Shoe Aluminium

RS100-CL200
2000mm

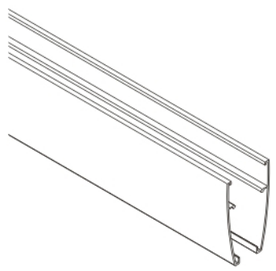

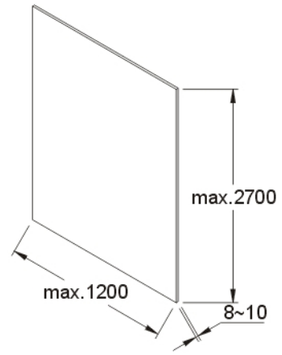

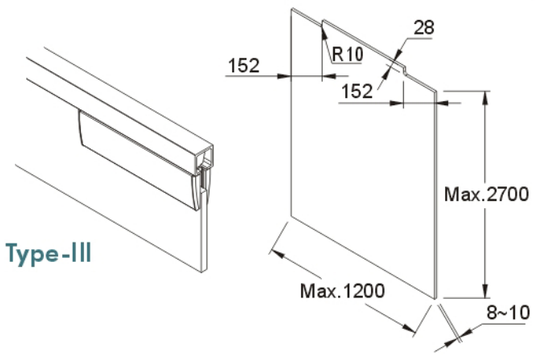

Type-III

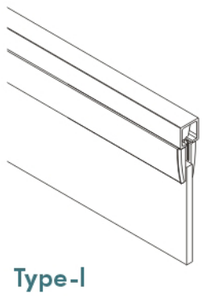
Type-I

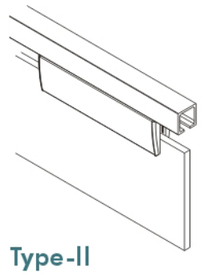
Type-II

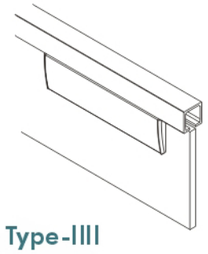
Type-IIII

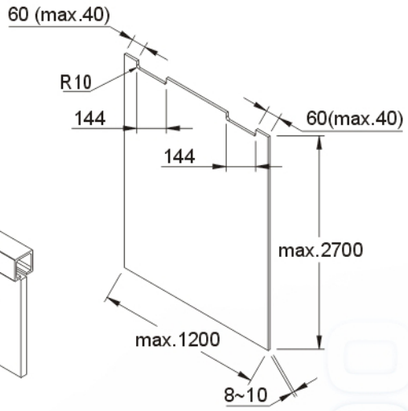

Type-I

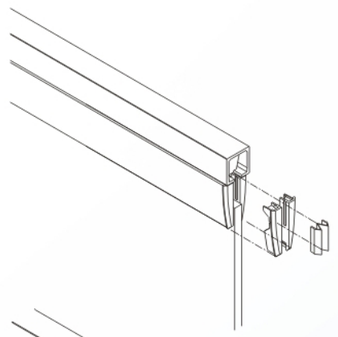

Type-II

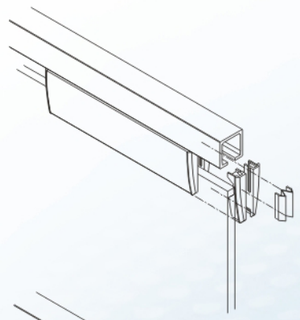

Type-III

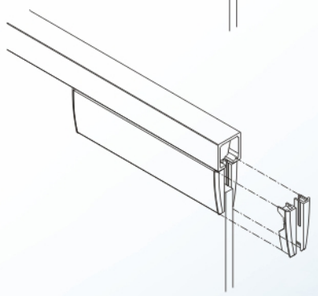

Type-IIII

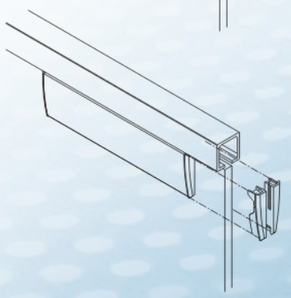

EPCO RS100 Sliding

Installation Illustration

A

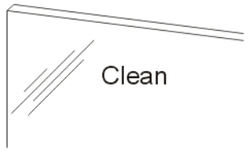

B

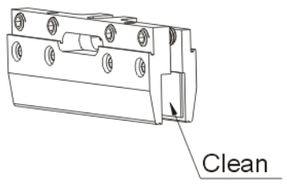

C

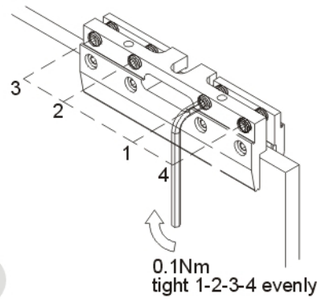

D

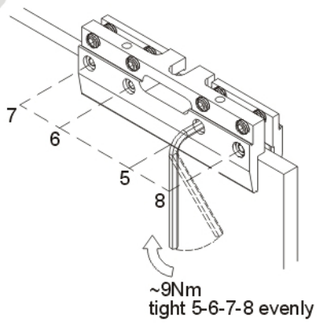

E

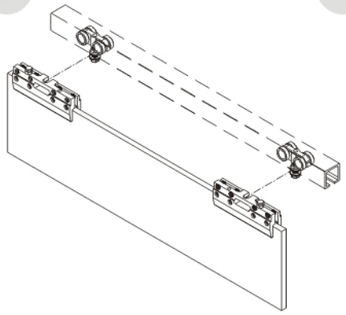

F

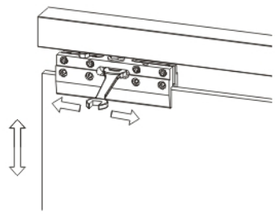

G

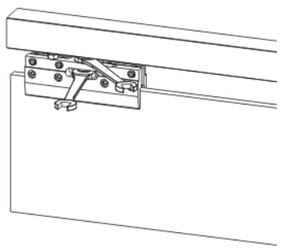

H

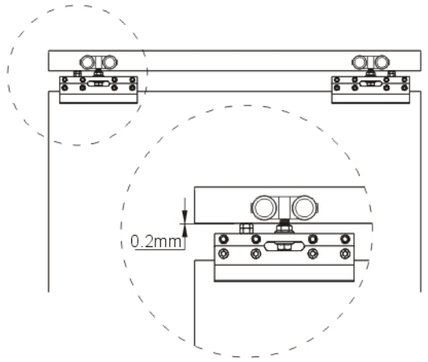

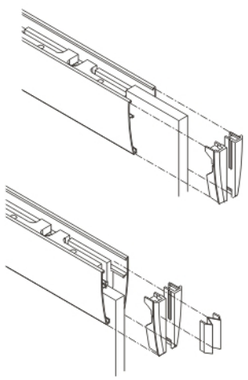

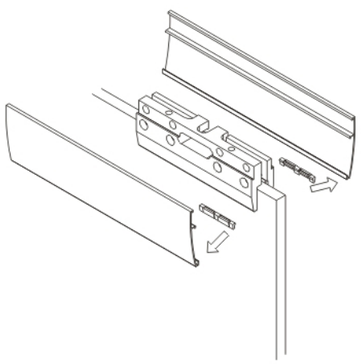

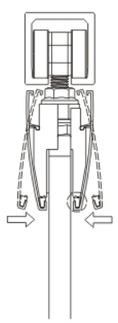

EPCO RS101 Patch Sliding

Specification and Components

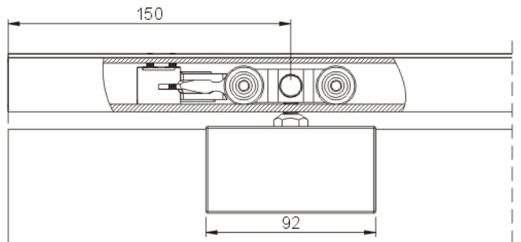

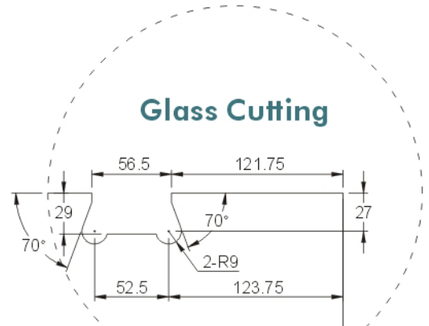

Door Weight : max .80kg

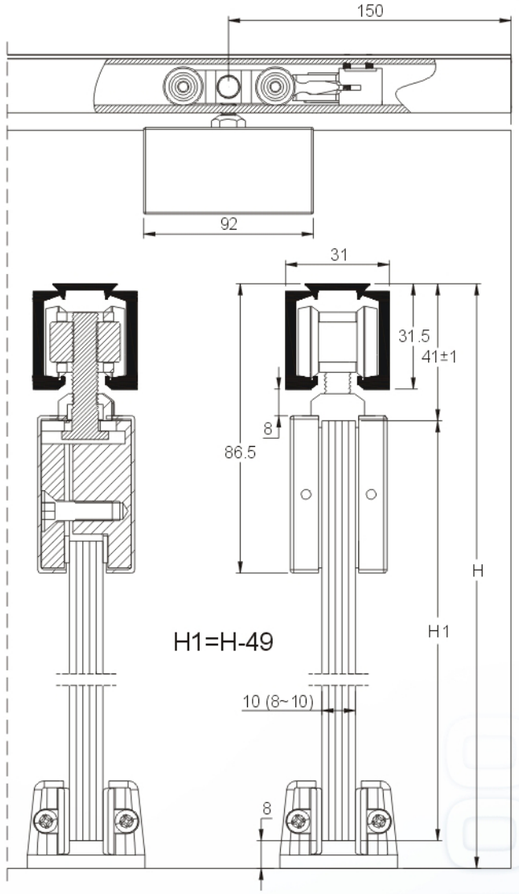

for 8~10mm glass
Door Weight : max .80kg

RS101 SET

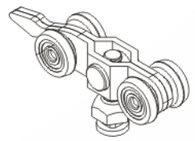

x2

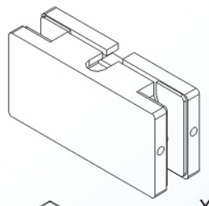

x2

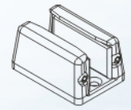

x1

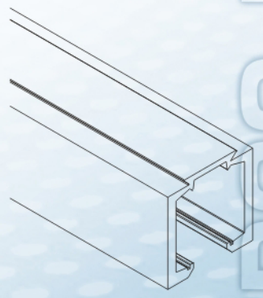

RS101-TRACK

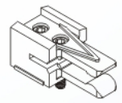

x2

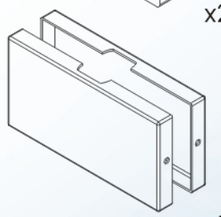

x2